ANSYS

White Paper

# A Collaborative Approach to Solving Engineering Problems with CFD: How Leading Researchers Benefit

*By Wim Slagter, Ph.D.*
*Lead Product Manager, ANSYS, Inc.*

Ongoing advances in software and hardware, combined with the rapid growth of high-performance computing, have created exciting opportunities to take engineering simulation to new levels of scale, speed and fidelity. Perhaps nowhere are the boundaries being pushed further than in the area of computational fluid dynamics (CFD), where transience, turbulence, instability and other variables frequently result in an enormous degree of simulation size and complexity.

While leading-edge CFD simulations occur in many industries and applications, the world's universities are at the forefront of some of today's most exciting CFD engineering innovations. Partnering with industry leaders via consortiums — while simultaneously leveraging "best and brightest" young engineers and large academic computing clusters — a number of university professors around the world are working at the extreme frontiers of CFD simulation.

*Any engineering team that engages in CFD simulation can look to academic researchers as role models for taking a true partnership approach with their solutions provider. By forming close, collaborative relationships that are based on trust, all engineering teams can accelerate their simulation efforts and maximize their investments in their CFD solution.*

From automotive and aeronautic engineering to biomedical applications, these professors' work is not only inspiring other engineers but ensuring that CFD software keeps pace with their needs, combining trusted performance with continuous innovation.

How do these pioneering researchers choose a CFD solution to support their massive — and massively complex — engineering simulations? Based on interviews with some of the world's leading CFD researchers, this paper investigates how they make critical software decisions. By learning about their assessments, other engineering teams can make more informed technology choices that ensure their purchase of CFD software will generate continuing value and returns over time.

**Achieving a High Return: Some Fundamental Questions**

Every company wants to ensure a high long-term return on its investments in CFD software — and research teams at the world's leading engineering programs are no different. In some cases, researchers and academics are even more demanding, as their mission relates to scientific discovery and challenging the status quo.

In choosing a CFD solution partner that maximizes return on investment over the long term, academic and other research institutions must begin by posing these fundamental questions:

- Is the solution versatile enough to manage the many aspects of our complex CFD simulations?
- Can the solution grow and expand as our simulation needs change?
- Has the partner conducted the types of rigorous quality-assurance activities we need to trust the simulation results?
- Are expert engineers working on continuous innovations for this solution — to ensure that it continues to represent the cutting edge in CFD?

- Does the solution support high-speed processing of large problems?
- Will the company we choose as a partner provide high-quality technical support that is relevant to our industry and applications?
- Can the solution be customized to meet the unique needs of our engineering analyses?

**Ensuring Technology Breadth, Depth and Reliability**

Academic researchers need to ensure that their solution of choice has the breadth, depth and scale needed to accommodate their sophisticated CFD simulations. Often, university teams require exceptional depth in their physical models (such as turbulence, chemistry, particulates and real-fluid properties), as well as physics breadth (including structural mechanics, fluid dynamics and thermal radiation) and coupling (for example, flow-induced deformation). Many applications also require transient analysis of moving parts.

To ensure that investments pay dividends over the long term, these scientists need to utilize a CFD solution designed to accommodate this simulation depth and breadth — as well as to create an integrated environment in which they can conduct a spectrum of CFD studies.

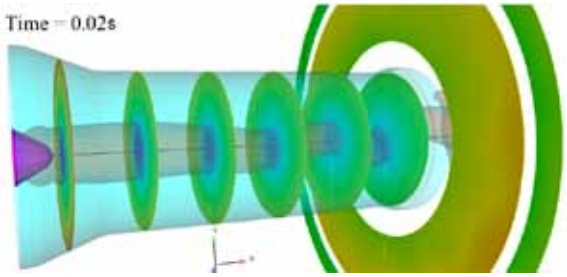


Professor Neil Bresloff's research group at the University of Southampton uses ANSYS FLUENT software to study the design of a modern lean-burn combustor for propulsion applications, using a multi-swirler fuel injector system under partially premixed combustion conditions. Combustion-induced vortex breakdown plays an important role in establishing the near-field aerodynamic characteristics of lean-burn fuel injectors, influencing both fuel/air mixing and flame stability. Shown here is the central vortex core structure inside the air-blast atomizer of the injector. This low-pressure structure was initially aligned with the axis of the injector inside the air-blast atomizer. It later breaks down at a point downstream and starts to precess about the axis of the injector while rotating at the same time around the axis of the injector (and the combustor). Bresloff's group regularly relies on ANSYS software to manage these types of multiphysics, numerically large problems.

**Delivering Exceptional Value for 15 Years**

At the University of Southampton in the U.K., Dr. Neil Bressloff has used ANSYS software for more than 15 years to solve a range of CFD problems — from the aerodynamic design of Formula 1 race cars to biological flows. His Computational Engineering and Design research group has selected the technology as its "tool of choice" for Ph.D. students because of its versatility in addressing all of the complex CFD challenges these students encounter in their diverse analyses. "ANSYS provides us with an integrated environment so that we no longer have to rely on separate software packages or legacy codes," says Bressloff. He and his student researchers also benefit from the dynamic meshing capabilities. "For a recent project, we modeled the flow of fluid in the gap that opens and closes adjacent to a hip implant. As the domain changes, ANSYS CFD automatically adapts, changing the movement and shape of the model. This capability provides the means to efficiently and accurately simulate this challenging biomedical problem." A long-time ANSYS user, Bressloff is confident in his observation that the solution continues to improve over time. "The software has grown to accommodate the kinds of large problems we solve on a daily basis, including turbulent combustion, which is one of the most complex CFD modeling challenges. ANSYS technology has the power and capability to create comprehensive models, as well as the parallelization and speedup to solve relatively quickly, even for numerically large simulations."

Academic researchers need to ensure that the solution will continue to grow and evolve to meet changing needs in analyzing complex fluid flows, heat and mass transfer, chemical reactions and related physical phenomena. If the solution provider has a world-class team of software developers on staff, then university researchers and other users can be assured that the solution will continue to represent the state of the art in CFD simulation.

Because pioneering work is often funded by competitive grants, industry consortiums and other third-party sources, university teams must ensure that every aspect of their research meets the highest standards of quality and integrity. This includes CFD software, which must be certified by ISO and subject to the most stringent quality assurance standards. Solutions must be tested rigorously to ensure their accuracy and fidelity before being placed into strict academic environments.

*"Each year, I rely on my solution provider to provide highly customized training for a new class of students in my research group, equipping them with the tools and skills they need to continue to create CFD innovations," says Professor Mohamed Pourkashanian at the University of Leeds. "Since even the best software cannot fulfill its potential unless it is used properly, this kind of personalized attention is critical to our ongoing research results."*

**Maximizing HPC and Other Investments**

Not only do leading engineering teams need to consider their long-term return on CFD solution investments, they need to ask and answer another important question: Will our CFD software enable us to maximize the return on our other investments — including high-performance computing (HPC) clusters, costly experimental equipment, and large teams of dedicated Ph.D. students?

While the software choice is critical, in reality it is just one component of a university's multi-million dollar investment in pioneering CFD research. Any solution has to have the power, speed and accuracy to maximize the performance of all the other working parts of a leading-edge CFD laboratory. A sub-par software solution will negatively affect the overall deliverables of the research team. In contrast, a high-quality solution will energize and facilitate the work of the entire university team, leading to faster, higher-fidelity, more accurate results that minimize the need for physical tests and experiments that consume precious time and resources. Any CFD solution that will be utilized in an HPC environment needs to have the scalability to run on thousands of cores, the ability to simulate up to a billion cells, physics-based load handling capabilities, and parallel file reading/writing capabilities that deliver near-linear scaleup in processing speed for numerically large solutions.

As HPC environments become more accessible and feasible for the typical engineer, it is important to remember this simple truth: An HPC cluster is only as good as the solution running on it. Without a CFD solution that is specifically designed to support massive parallelism and other fundamental HPC capabilities, even the largest cluster will be underutilized and unable to deliver its highest potential.

**The Value of Expert Support and Deep Industry Experience**

When academic research teams are working at the frontiers of CFD engineering — and challenging the known limits of simulation — one critical consideration is the quality of the services they receive from their solution provider. Like other pioneers, these university teams are going where no one has gone before. In doing so, they may need services from industry experts to bring full solution capabilities to bear on the engineering task at hand.

Solutions should not only be backed by an expert development team that continually shapes future software innovations, but by an expert support team that stands ready to maximize the real-world value of the current solution. Academic customers should be able to call upon this team as they work to solve exciting new problems that involve complex CFD simulations. Working together, the university team and the solution provider can determine just how far the solution can be extended to meet groundbreaking new applications.

Training is another critical aspect of support for university research teams. These academic teams undergo high annual staff turnover, as experienced researchers graduate and new team members enter the program. Instead of relying on limited internal resources to accomplish software training, university teams should be able to rely on their trusted solution provider to ensure that their newest engineers are leveraging the full capabilities of CFD solutions in their daily work.

## More Than a Decade of Support

Dr. Behnam Pourdeyhimi has been using ANSYS software for more than 12 years in his work leading the Nonwovens Cooperative Research Center at North Carolina State University in the U.S. Pourdeyhimi relies on ANSYS to deliver the large-scale, high-fidelity modeling capabilities his group needs to study fiber entangling, absorbency and fluid flow, material quenching, particle and liquid filtration, and other complex CFD issues related to manufacturing nonwoven fabrics. "From water jet modeling to multiphase flows, the software offers everything we need in a single tool that is very convenient to use. The complexity of our work requires a very comprehensive software solution," says Pourdeyhimi. He also values the high level of support his team receives. "When you are engaged in pushing the performance envelope in 3-D modeling, there are frequent questions that arise — and ANSYS is very responsive to our needs," he says. "We have also turned to the software developer to train our student researchers in emerging topics such as HPC-enabled simulations, and we have been very pleased with the results." Pourdeyhimi has another, more practical reason for choosing ANSYS. "We work with a consortium of more than 70 companies with a vested interest in the nonwovens industry, and the vast majority of consortium members are using ANSYS solutions," notes Pourdeyhimi. "ANSYS has emerged as the industry standard in CFD simulation."

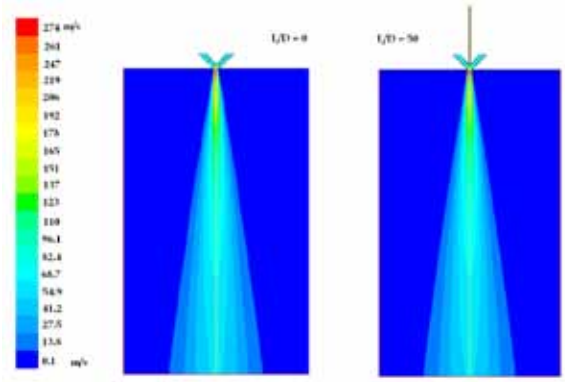

Professor Behnam Pourdeyhimi's research group at North Carolina University uses ANSYS FLUENT software to model air flow fields during melt-blowing production processes for nonwoven fibers. During melt blowing, molten polymer streams are injected into high-velocity gas jets, and polymer fibers are attenuated by the resulting drag force. By simulating air flows and velocities below the melt-blowing dies during this production process, Pourdeyhimi strives to maximize both fiber quality and process performance.

## The Power of Customization

Out-of-the-box solution capabilities meet the needs of many CFD engineers, but most researchers are taking their complex simulations to another level — and they particularly value the ability to customize a solution to meet the needs of their own CFD initiatives. Critical tasks, including fluid flow engineering, become even more challenging in an increasingly complex research and development environment. Any organization's CFD investments must be channeled to resolve specific flow engineering problems. CFD solutions must be readily customizable and extensible to meet the engineering team's simulation and work flow process requirements — both for today and tomorrow. Users must be able to implement their own specialty physics model, and the user environment should be readily customized and scripted for ensuring established best practices and further workflow automation.

The chosen CFD solution should allow users to easily add new physical models, create additional solution variables, define property relationships, set boundary conditions and profiles, and perform other critical customization tasks.

Whatever the specific customization need, university teams must ensure that their own CFD engineering expertise is matched by the deep solutions expertise needed to accomplish their unique simulation goals. If the selected provider does not have this deep expertise, they might find themselves investing precious time and resources in internal code development, instead of focusing on their groundbreaking CFD discoveries.

An expert solution provider should always be ready to create extensions of software to meet unique modeling requirements, as well as to develop automated tools that streamline setup, solution and visualization of frequently repeated analyses. For advanced problem solving, solution providers should be able to help develop a CFD modeling approach, solve the complete problem, document CFD best practices, and provide technology transfer to the customer group.

By offering these kinds of expert customization services, solution providers allow both academic teams and other customers to focus on their core research, rather than on routine software programming and maintenance tasks.

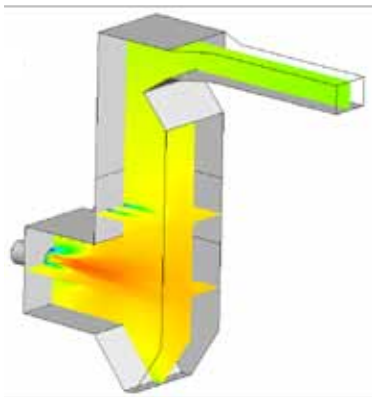

Professor Mohamed Pourkashanian and his team at the University of Leeds used engineering simulation software to predict oxy-coal combustion in an industrial combustion test facility with recycled flue gas to address the major technical challenges of using this system for power generation with carbon capture and sequestration. Both RANS and LES calculations were performed with advanced combustion submodels, with realistic boundary conditions being defined based on experimental data. The simulations reveal some unique characteristics of the oxy-coal combustion, which is important to development of the technology.

### Commercial Meets Customized: Best of Both Worlds

At the University of Leeds in the U.K., Dr. Mohamed Pourkashanian's team uses ANSYS fluid dynamics soultions daily in the Centre for Computational Fluid Dynamics. There, researchers study CFD problems ranging from aero engines and fuels to advanced power generation. "We choose to use ANSYS solutions because the quality assurance and control processes at ANSYS enable us to meet rigorous quality standards in our own work," says Pourkashanian. "I would estimate that, by enabling us to confidently replace physical testing with engineering simulation, our partnership with ANSYS has saved millions of dollars in time and resources." Their complex models of jet engines, fuel chemistry and combustion, power generation and other challenging problems requires Pourkashanian and his team to customize the software to a certain extent, with excellent results. "We have been very impressed with the way ANSYS has supported our needs for originality and customization. It is very easy for us to develop new physical models and then move them into ANSYS solutions. This approach has truly represented 'the best of both worlds' by combining the ease and reliability of a commercial product with a customized in-house solution," says Pourkashanian.

## Taking a Partnership Approach

Perhaps the most important selection criteria for university teams is identifying a solution provider who will act as a true partner in their exacting CFD research — a concept applicable to any product development organization. A solution provider who will be available to answer questions, customize technology, provide custom-tailored training, and otherwise assist in pushing the boundaries of CFD simulation is an invaluable catalyst to academic work. While technology leadership is a given when choosing a CFD solution, this collaborative "team" approach is equally important.

Any engineering team that engages in CFD simulation can look to academic researchers as role models for taking a true partnership approach with their solutions provider. By forming close, collaborative relationships that are based on trust, all engineering teams can accelerate their simulation efforts and maximize their investments in their CFD solution.

By choosing the same trusted CFD solution as pioneering academic research teams, other engineering organizations can ensure that they are working with technology that represents the highest level of accuracy, fidelity, speed, scalability and other critical performance parameters — as well as working with a partner who offers customized attention. And, because these university teams are constantly providing input to the solution provider — and influencing the future direction of the solution — other users can benefit indirectly from their work that pushes the boundaries of CFD every day.

ANSYS, Inc.
Southpointe
275 Technology Drive
Canonsburg, PA 15317
U.S.A.
724.746.3304
ansysinfo@ansys.com

Toll Free U.S.A./Canada
1.866.267.9724

Toll Free Mexico
001.866.267.9724

Europe
44.870.010.4456
eu.sales@ansys.com



ANSYS, Inc. is one of the world's leading engineering simulation software providers. Its technology has enabled customers to predict with accuracy that their product designs will thrive in the real world. The company offers a common platform of fully integrated multiphysics software tools designed to optimize product development processes for a wide range of industries, including aerospace, automotive, civil engineering, consumer products, chemical process, electronics, environmental, healthcare, marine, power, sports and others. Applied to design concept, final-stage testing, validation and trouble-shooting existing designs, software from ANSYS can significantly speed design and development times, reduce costs, and provide insight and understanding into product and process performance. Visit www.ansys.com for more information.